AUTONOMOUS HEALTH ASSISTANCE AND MEDICATION DELIVERY SYSTEM

A PROJECT REPORT

Submitted by

MOHAN D	**(620121106060)**
NIRMALRAJ L	**(620121106074)**
SANJAYRAJ R	**(620121106095)**
SUBAVIGNESH E	**(620121106114)**

In partial fulfillment for the award of the degree of

BACHELOR OF ENGINEERING

in

ELECTRONICS AND COMMUNICATION ENGINEERING

AVS ENGINEERING COLLEGE, AMMAPET, SALEM

ANNA UNIVERSITY: CHENNAI 600 025

MAY - 2025

ANNA UNIVERSITY : CHENNAI 600 025

BONAFIDE CERTIFICATE

Certified that the project report **"AUTONOMOUS HEALTH ASSISTANCE AND MEDICATION DELIVERY SYSTEM"** is the bonafide work of **"Mr.D.MOHAN (620121106060), Mr.L.NIRMALRAJ(620121106074), Mr.R.SANJAYRAJ(620121106095),Mr.E.SUBAVIGNESH(620121106114)** "who carried out the project work under my supervision.

SIGNATURE	**SIGNATURE**
HEAD OF THE DEPARTMENT	**SUPERVISOR**
Prof. R S.RAMYA,M.E.,	**Prof.S.MURUGAN.M.E.,**
Associative Professor,	Assistant professor,
Department of ECE,	Department of ECE,
AVS Engineering College,	AVS Engineering College,
Salem – 636003	Salem– 636003

Submitted to the project viva-Voce examination held on_____

INTERNALEXAMINER **EXTERNALEXAMINER**

ACKNOWLEDGEMENT

We would like to express our gratitude and appreciation to all those who gave us the possibility to complete this report. We would like to acknowledge with much appreciation to our honorable Chairman, Shri. **K.KAILASAM**, Secretary. **Mr. K.RAJAVINAYAKAM MBA.,** and also to our Correspondent, **Mr. K.SENTHILKUMAR B.TECH.,** for providing all necessary facilities for the successful completion of the project.

We have immense pleasure in expressing our gratitude to our beloved Principal,**Dr.J.SUNDARARAJANM.TECH.,Ph.D.,** for allowing us to have extensive use of our college facilities to do this project. It gives us a great sense of pleasure in expressing our gratefulness to our beloved Vice Principal's **,Dr.R.VISWANATHANM.E.,Ph.D.,** and **Dr.D.R.JOSHUAM.E.,Ph.D.,** for their professional guidance in scheduling the project work to complete on time.

We express our heartiest gratitude to Head of the Department **Prof. R.S.RAMYA.M.E.**,ECE for her guidance and encouragement through out the Project Period. Also, we express our sincere and heartiest gratitude to Class Advisor, **Prof. G.VALARMATHI M.E., Assistant Professor** for her constant support and excellent direction in all aspects. We are indebted to our project coordinator and guide **Prof.S.MURUGAN M.E.,Assistant Professor** his constant help and excellent creative ideas over the period of project work

We especially thank all our Teaching and Non-Teaching Staff Members of the **ELECTRONICS AND COMMUNICATION ENGINEERING** Department for their consistent encouragement the project work with full interest and zeal. We pay our profound gratitude to the Almighty God for his invisible vigilance and would like to thank our Parents for giving us support, encouragement and guidance throughout the course of our work.

ABSTRACT

The Autonomous Health Assistance and Medication Delivery System (AHAMDS) is a groundbreaking technological solution aimed at revolutionizing healthcare delivery by leveraging automation and artificial intelligence. This system combines advanced robotics, IoT sensors, machine learning algorithms, and medication dispensing mechanisms to provide personalized and efficient health assistance to individuals in need. At its core, AHAMDS is designed to address various challenges faced by healthcare systems, including the aging population, chronic disease management, medication adherence, and limited access to healthcare services.

AHAMDS operates autonomously within a home or healthcare facility, monitoring vital signs, tracking medication schedules, and providing timely reminders to users. Through integrated sensors and wearable devices, the system continuously collects and analyzes data related to the user's health status, such as heart rate, blood pressure, and glucose levels. Using sophisticated machine learning algorithms, AHAMDS can detect anomalies or deviations from normal health parameters, alerting both users and healthcare providers in case of emergencies or critical situations.

One of the key features of AHAMDS is its medication delivery system, which ensures timely and accurate administration of prescribed medication. By removing the burden of medication management from user and reducing the risk of errors or omissions,AHAMDS improves medication adherence and overall health outcomes.It is one of the important feature of AHAMDS system.

TABLE OF CONTENT

CHAPTER NO:	TITLE:	PAGE NO:
	ABSTRACT	**IV**
	LIST OF FIGURES	**IX**
	LIST OF ABBREVATION	**X**
1	**INTRODUCTION**	**1**
2	**LITERATURE SURVEY**	**4**
	2.1 FULLY AUTONOMOUS DRUG AND FOOD ELIVERY ROBOT FOR HOSPITAL	4
	2.2 A ROBOTIC SYSTEM OF AUTONOMOUS MEDICATION AND WATER DELIVERY	5
3	**EXISTING SYSTEM**	8
	3.1 EXISTING SYSTEM BLOCK DIAGRAM	10
4	**PROPOSED SYSTEM**	**11**
	4.1 PROPOSED BLOCK DIAGRAM	14
5	**COMPONENTS REQUIRED**	**15**
	5.1 COMPONENTS EXPLANATION	15
	5.2 MOTOR	16
	5.3 CONTROLLER	16
	5.4 TEMPERATURE SENSOR	17
	5.5 HEART BEAT SENSOR	17
	5.6 GLUCOSE	18
	5.7 POWER SUPPLY	18
	5.8 LCD	19
6	**HARDWARE DESCRIPTION**	**20**
	6.1 ALLFEATURE	20

6.1.1 SPECIFICATION 20
6.2 PIN CONFIGURATION 22
6.2.1 FEATURES 23
6.3 MOTOR 24
6.3.1 CONSTRUCTION OF ELECTRIC MOTOR 25
6.3.2 ELECTRIC MOTOR BEARINGS 26
6.3.3 ELECTRIC MOTOR ROTOR 26
6.3.4 ELECTRIC MOTOR STATOR 27
6.3.5 ELECTRIC MOTOR ARMATURE 27
6.3.6 CONTROLLER 27
6.4 POWER SUPPLY 28
6.5 TEMPERATURE SENSOR 29
6.6 HEART BEAT SENSOR 30
6.7 GLUCOSE 32
6.8 LCD 32
6.8.1 DIGITAL PINS 36
6.8.2 ANALOGPINS 37
6.8.3 POWER PINS 38
6.9 POWERSUPPLY 39
6.10 LINEAR REGULATOR 41
6.11 AC ADAPTER 42
7 HARDWARE OUTPUT 43
8 RESULT 45
9 CONCLUSION 46
10 FUTURE SCOPE 49
11 REFERENCE 53

LIST OF FIGURES

CHAPTER NO:	DESCRIPTION:	PAGE NO:
3.1	EXISTING SYSTEM BLOCK DIAGRAM	10
4.1	PROPOSED SYSTEM BLOCK DIAGRAM	14
6.1	MOTOR DRIVE MODULE	20
6.2	DRIVER CHIP	22
6.3	ELECTRIC MOTOR STATOR	26
6.4	ARDUINO UNO	27

LIST OF ABBREVIATIONS

ABBREVIATIONS:	FULL FORM:
AI	Artificial Intelligence
IOT	Internet of Things
LCD	Liquid Crystal Display
L298	(IC) Dual H-Bridge Motor Driver
DC	Direct Current
AC	Alternating Current
BPM	Beats Per Minute
CGM	Continuous Glucose Monitoring
ICD	Interface Control Document
ADC	Analog to Digital Converter
SRAM	Static Random Access Memory
SPI	Serial Peripheral Interface
TX/RX	Transmit/Receive
PWM	Pulse Width Modulation
PPG	Photoplethysmography
GDPR	General Data Protection Regulation
EHR	Electronic Health Records
SMPS	Switched-Mode Power Supply
USB	Universal Serial Bus
VR	Virtual Reality

CHAPTER-1

INTRODUCTION

The advent of autonomous health assistance and medication delivery systems marks a significant leap forward in healthcare technology, promising to revolutionize patient care and medication management. In an era where healthcare resources are often stretched thin and access to medical facilities can be challenging, these systems offer a lifeline, particularly for individuals with chronic conditions or limited mobility. At its core, an autonomous health assistance and medication delivery system leverages cutting-edge technologies such as robotics, artificial intelligence (AI), and Internet of Things (IoT) to provide personalized, timely, and efficient healthcare solutions.

One of the key features of these systems is their ability to autonomously monitor patients' health metrics in real-time. Utilizing sensors for vital signs monitoring, such as heart rate, blood pressure, and blood glucose levels, these systems can continuously assess patients' health status and promptly alert healthcare providers or caregivers in case of any anomalies or emergencies. This constant monitoring not only enhances patient safety but also enables early intervention, potentially preventing adverse health events or hospitalizations.

Autonomous health assistance systems are designed to provide personalized care tailored to each individual's unique health needs. Through AI algorithms and machine learning, these systems can analyze vast amounts of patient data, including medical history, treatment plans, and lifestyle factors, to generate customized care plans and medication schedules.

Autonomous health assistance systems also excel in facilitating medication delivery to patients' homes. Integrating robotic platforms and smart dispensing technologies, these systems can accurately and reliably dispense prescribed medications at the right time and dosage. This feature is particularly beneficial for elderly patients or those with mobility limitations who may struggle with medication adherence or accessing pharmacy services. By streamlining medication delivery processes, these systems not only enhance convenience for patients but also reduce the burden on healthcare providers and pharmacies, freeing up resources to focus on more critical tasks.

Autonomous health assistance systems prioritize connectivity and interoperability to ensure seamless coordination of care across various healthcare stakeholders. By integrating with electronic health record (EHR) systems, telehealth platforms, and wearable devices, these systems facilitate real-time communication and data exchange between patients, caregivers, and healthcare professionals. This interoperability enables remote consultations, virtual monitoring, and collaborative decision- making, fostering continuity of care and enhancing patient engagement in their health management.

Another key aspect of autonomous health assistance systems is their adaptability and scalability to meet evolving healthcare needs and technological advancements. As medical knowledge and technologies continue to evolve, these systems can be updated and expanded to incorporate new features, therapies, and regulatory requirements. Whether it's integrating advanced diagnostics, incorporating telemedicine capabilities, or complying with emerging standards and regulations.

Autonomous health assistance systems prioritize data security and privacy to safeguard patients' sensitive health information. Implementing robust encryption protocols, access controls, and data governance frameworks, these systems ensure compliance with regulatory requirements such as the Health Insurance Portability and Accountability Act (HIPAA) and the General Data Protection Regulation (GDPR). By instilling trust and confidence in patients and healthcare providers, these security measures enable widespread adoption and acceptance of autonomous health assistance technologies.

Autonomous health assistance systems hold the potential to address healthcare disparities and improve access to quality care, particularly in underserved or remote communities. By overcoming geographical barriers and shortages of healthcare professionals, these systems extend the reach of medical expertise and services to populations that may otherwise struggle to access timely and comprehensive care. Whether it's delivering medications to rural areas, providing teleconsultations to homebound patients, or monitoring chronic conditions remotely, these systems democratize healthcare delivery and promote health equity.

Autonomous health assistance and medication delivery systems represent a transformative paradigm shift in healthcare delivery, offering a comprehensive suite of capabilities to enhance patient care, medication management, and healthcare access.

CHAPTER -2

LITERATURE SURVEY

2.1 Fully Autonomous Drug and Food Delivery Robot for Hospital and Patient Care Logistic Management based on Artificial Intelligence Antica Eam opha , Sittikorn Titaviriya and Wibool Piyawattanametha

We developed a fully autonomous drug and food delivery robot for hospital and patient care logistic management based on an artificial intelligence. This robot will act as an intermediary in delivering food, medicine, and medical supplies among the departments themselves or departments and patients, which will be controlled via a very intuitive software that enables navigation technology with intelligent coordinate systems by simulating the use area as a map to control the movement of the robot. The intelligent, coordinate navigation technology for this robot will be integrated with a depth camera, and a LIDAR sensor operating on an robot operating system melodic for Simultaneous Localization and Mapping allowing robots to recognize objects or people in the environment. The robot achieves the maximum traveling speed of 0.2 m/s and can operate for 2 hrs with a fully charged battery.

2.2 A Robotic System for Autonomous Medication and Water Delivery Victor Emeli Alan, R. Wagner Charles ,C. Kemp

Poor medication adherence and dehydration are well-documented challenges for older adults living independently that lead to reduced quality of life. Robotic delivery of pills and water in the home could potentially improve medication adherence and hydration for older adults by providing timely, reliable, and convenient delivery

The system consists of a mobile robot with a tray, a stationary dispensing robot, and a smartphone carried by the user. Within this paper, we discuss the opportunity to improve quality of life, describe our robotic system, and convey results from an experimental evaluation of the system's delivery performance.

2.3 Autonomous Robot to Perform Touch-less Assistance for Doctors

Tushar Biswas; P Kumar Maduri;

Riya Singh; Rishabh Srivastava;

K Singh

2020 2nd International Conference on Advances in Computing, Communication Control and Networking (ICACCCN)

In the paper an autonomous robot as assistance is dedicated to doctors. As we see a wide range of human robot is working in many areas such as manufacturing, entertainment industry, health care systems etc. In today's world health and fitness is most important part of everyone's life. And emerging diseases shows that if we do not have proper healthcare system, it can cause danger to life of human being. So, we need proper precautions for which this autonomous robot will help the doctors. As many technologies have been launched in the market for health system but this robot is different from all those technologies. Controlling the robot is little bit difficult sometimes and for doctors while treatment it is tough to handle the robot. For that we designed robot which will automatically follow the doctor (maintaining an appropriate distance), through the array of some distance measuring sensors and follow the instruction of their instructor (doctor). It also has automatic sanitization property which helps in performing touch-less operation.

2.4 A Deep Learning Based Autonomous Mobile Robotic Assistive Care

Giver Arshia Khan;

Mehdi Bahrami;

Yumna Anwar

2019 IEEE International Conference on E-health Networking, Application & Services (HealthCom)

Assistive robotic technology is increasingly employed in many industries including health care. One of the most important features of this assistive technology is its autonomous verbal communication skill. We propose a new theory for autonomous agent based on the five human senses. Then we proceed to address one of the five senses, the speech. Our approach to address and develop an autonomous verbal communication is to apply deep learning to learn about different topics in healthcare. We developed a novel approach where we created a set of question-answer dataset from articles and interviews with physician specialist from U.S. National Public Radio (NPR). We trained a deep learning model which is able to listen to conversations between a patient and a physician to answer to the questions when the physician is not able to answer or it might not answer the question completely. We discuss the corpus on Health Science which shows what NPR can teach to machine. We share the usage of the Corpus to train a deep learning model to be used by pepper which is a humanoid robot that can be implemented in helping provide elderly care in individuals diagnosed with early stages of dementia.

CHAPTER-3

EXISTINGSYSTEM

The existing system incorporates a power supply unit, a controller, an LCD display, an L298 motor driver, and a temperature sensor to create a versatile temperature-controlled device. The power supply unit provides the necessary voltage and current to operate the components reliably. It ensures stability and consistency in powering the entire system, allowing for uninterrupted operation. The controller, often an Arduino or a similar micro controller, serves as the brain of the system, processing data from sensors and controlling output devices. It orchestrates the operation of the system based on programmed logic and user- defined parameters.

The LCD display is utilized for visual feedback, providing users with real-time information about the system's status, such as temperature readings and operational modes. This enhances user interaction and facilitates monitoring and troubleshooting. The L298 motor driver acts as a crucial interface between the controller and external devices such as motors or actuators. It enables precise control over motor speed and direction, allowing for dynamic adjustments based on temperature sensor data.

The temperature sensor plays a pivotal role in the system by monitoring ambient temperature conditions. It provides accurate temperature readings to the controller, enabling the system to respond dynamically to changes in temperature. Based on predefined thresholds or user-set parameters, the controller can activate or deactivate output devices, such as cooling fans or heaters, to maintain the desired temperature level.

Additionally, the system may incorporate safety features and fail-safes to ensure reliable operation and protect against potential hazards. For instance, temperature limits can be programmed into the controller to prevent overheating or freezing conditions. In case of sensor malfunction or system error, the controller can trigger alarms or shutdown procedures to mitigate risks and prevent damage.

The system's architecture allows for scalability and customization to suit various applications and environments. Additional sensors, actuators, or communication modules can be easily integrated into the system to expand its functionality. For example, humidity sensors or pressure sensors can be included to create a more comprehensive environmental monitoring system.

Another aspect of the existing system is its modularity, which facilitates maintenance and troubleshooting. Each component is designed to be easily replaceable or upgradeable, minimizing downtime and reducing repair costs. This modularity also allows for iterative improvements and enhancements to be implemented incrementally, ensuring that the system remains relevant and adaptable to evolving needs and technologies.

The system's design prioritizes energy efficiency and resource optimization. Power-saving features, such as sleep modes or duty cycling, can be implemented to reduce energy consumption during idle periods. Additionally, the controller's firmware can be optimized to minimize processing overhead and maximize battery life in portable applications.

The system's user interface is designed to be intuitive and user- friendly, allowing users to interact with the system easily. Menu systems or graphical interfaces displayed on the LCD screen enable users to configure settings, view sensor readings, and monitor system status at a glance.

Additionally the system's robustness and reliability are ensured through rigorous testing and validation procedures. Each component undergoes quality assurance checks to verify its performance and durability under various operating conditions. This attention to quality and reliability ensures that the system delivers consistent and dependable performance in real-world applications.

The existing system comprising a power supply unit, controller, LCD display, L298 motor driver, and temperature sensor offers a versatile solution for temperature-controlled applications. With its modular design, energy-efficient operation, and user-friendly interface, the system provides reliable performance, scalability, and flexibility to meet diverse requirements across different domains. Through continuous refinement and innovation, this system serves as a foundation for creating smart and adaptive environments that enhance comfort, efficiency, and safety

3.1 EXISTING SYSTEM BLOCK DIAGRAM.

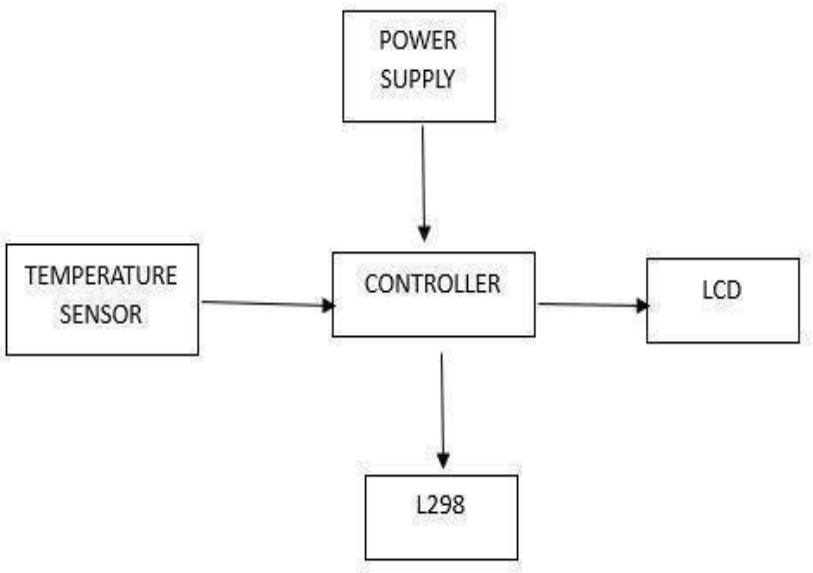

Fig 3.1 EXISTING SYSTEM BLOCK DIAGRAM

CHAPTER-4

PROPOSED SYSTEM

The proposed system integrates a variety of components to create a comprehensive health monitoring and medication delivery system. At its core is a controller, which orchestrates the operation of the entire system. This controller interfaces with various sensors, including a temperature sensor for monitoring ambient temperature, a heartbeat sensor for tracking vital signs, and a glucose sensor for monitoring blood sugar levels. These sensors provide crucial health data, enabling real-time monitoring of the patient's condition.

The system incorporates an LCD display to provide a user-friendly interface for displaying vital information such as temperature, heart rate, glucose levels, and medication schedules. This allows patients and caregivers to easily access and interpret the data collected by the sensors. The LCD display also provides alerts and reminders for medication doses, ensuring timely administration of medications.

To facilitate medication delivery, the system utilizes an L298 motor driver module, controlling two motors (M1 and M2) responsible for dispensing medication.

The controller regulates the operation of these motors based on the medication schedule and dosage requirements programmed into the system. This automated medication delivery system ensures accurate and timely administration of medications, reducing the risk of errors and improving patient adherence to treatment regimens.

The proposed system includes a power supply unit to provide stable and reliable power to all components.

Ensuring uninterrupted operation of the system even in the event of power outages. The robust power supply ensures continuous monitoring and medication delivery, enhancing patient safety and peace of mind.

To enhance the system's functionality and usability, wireless connectivity options can be integrated, allowing remote monitoring and control of the system. This connectivity enables healthcare providers to remotely access patient data, adjust medication schedules, and receive alerts in case of emergencies. Patients and caregivers can also receive notifications and reminders via mobile applications or web interfaces, improving communication and collaboration in managing healthcare.

The proposed system can incorporate data logging capabilities, storing historical health data for analysis and trend monitoring. This allows healthcare providers to track changes in the patient's health status over time, identify patterns, and make informed decisions about treatment adjustments. Data logging also enables retrospective analysis of medication adherence and effectiveness, facilitating continuous improvement in patient care.

Additionally, the system can be designed with modularity and scalability in mind, allowing for easy expansion and customization to meet the unique needs of different patient populations and healthcare settings. Modular components can be added or replaced as needed, ensuring flexibility and adaptability to evolving healthcare requirements. This scalability enables the system to grow with the organization and accommodate changes in patient demographics, technological advancements, and regulatory requirements.

The proposed system prioritizes patient privacy and data security, implementing robust encryption protocols and access controls to protect sensitive health information. Compliance with healthcare regulations such as the Health Insurance Portability and Accountability Act (HIPAA) ensures that patient data is handled in accordance with legal requirements, maintaining patient trust and confidentiality.

The proposed system can incorporate artificial intelligence (AI) algorithms to analyze health data and provide personalized insights and recommendations. AI-powered predictive analytics can identify potential health risks, predict future health outcomes, and suggest proactive interventions to prevent complications. This personalized approach to healthcare management improves patient outcomes and enhances the efficiency of healthcare delivery.

The proposed system offers a comprehensive solution for health monitoring and medication delivery, leveraging a range of components to provide real-time data collection, automated medication administration, and personalized patient care. By integrating sensors, controllers, displays, motors, power supplies, and connectivity options, the system enhances patient safety, adherence to treatment regimens, and overall quality of care. With its modular design, scalability, and focus on privacy and security, the proposed system is well-positioned to meet the diverse needs of patients and healthcare providers in various settings.

4.1 PROPOSED BLOCK DIAGRAM

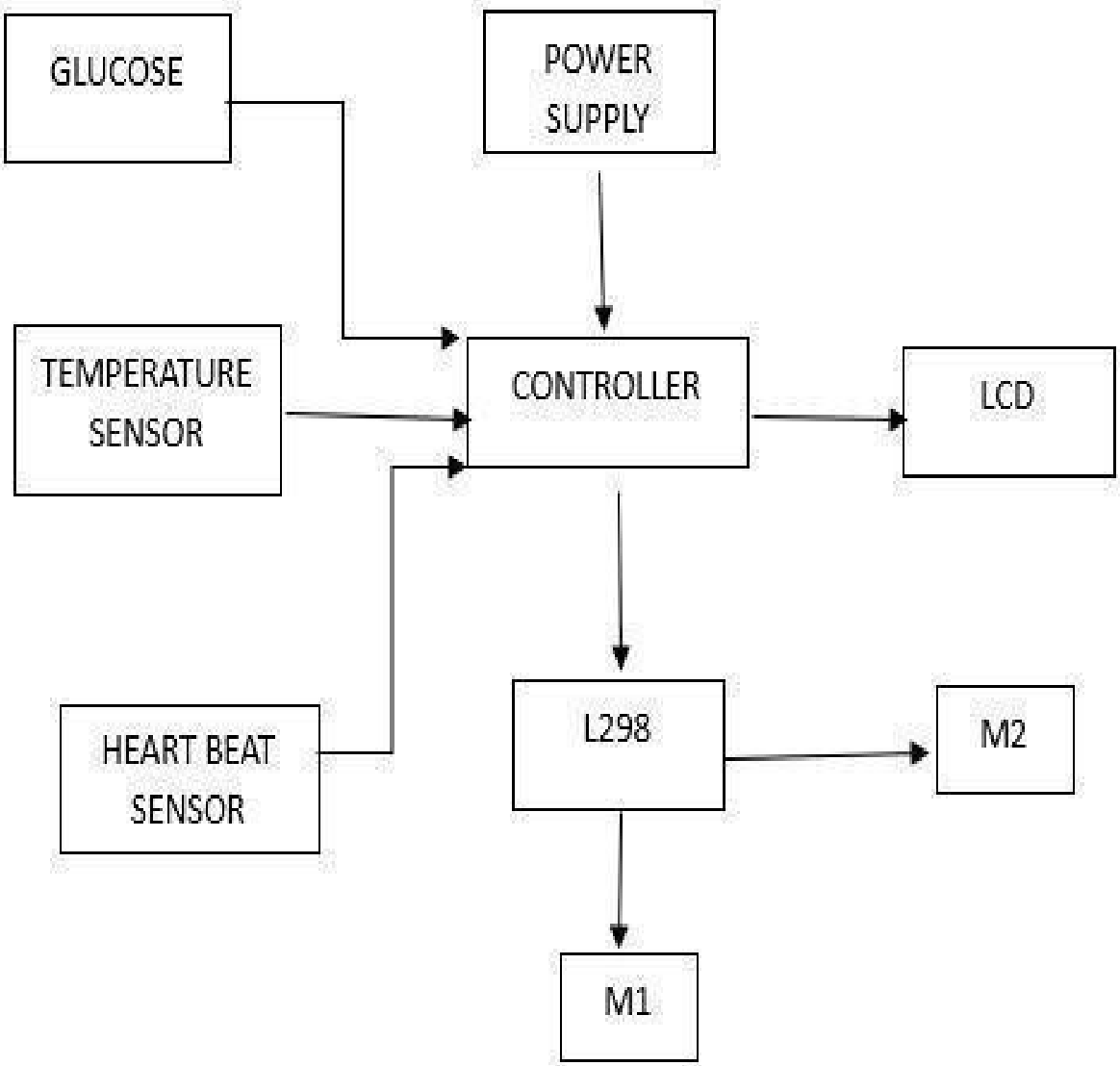

Fig 4.1 PROPOSEDBLOCK DIAGRAM

CHAPTER -5

COMPONENTSRECQUIRED

- L298
- motor
- Controller
- Temperature sensor
- Heart beat sensor
- glucose
- power supply
- lcd

5.1 COMPONENTS EXPLANATION

L298

The L298 is a dual full-bridge driver integrated circuit (IC) commonly used in motor control applications. It is capable of driving two DC motors or one stepper motor with bi-directional control. The device operates on a wide voltage range and can handle peak currents up to 3A per channel, making it suitable for a variety of robotic and automation projects. Its built-in protection features such as thermal shutdown and overcurrent protection enhance its reliability. With its simple interface and robust performance, the L298 serves as a convenient solution for controlling motors in diverse electronic projects, from hobbyist endeavors to industrial applications.

5.2 Motor

In an autonomous health assistance and medication delivery system, motors enable mobility, precision, and automation. DC geared or brushless DC (BLDC) motors power the robot's movement, offering high torque and smooth navigation. Servo motors or stepper motors are used in robotic arms for accurate medicine handling and dispensing. Micro servo or mini gear motors operate internal mechanisms like drawers or pill ejectors. These motors ensure precise, safe, and reliable operation in sensitive healthcare environments. Coupled with sensors and controllers, they form the mechanical backbone of the system, supporting efficient and contactless delivery of medications to patients.

5.3 Controller

In an autonomous health assistance and medication delivery system, the controller acts as the brain, managing all operations. Microcontrollers like Arduino, Raspberry Pi, or STM32 process sensor data, control motor functions, and execute programmed tasks such as navigation, obstacle avoidance, and medication dispensing. They communicate with peripherals including cameras, GPS, and wireless modules to ensure real-time decision- making. Controllers also interface with software for scheduling and patient data management. By coordinating motors, sensors, and communication modules, the controller ensures smooth, autonomous, and safe system performance, making it essential for reliable healthcare service delivery in hospitals, clinics, and home care environments.

5.4 Temperature sensor

In an autonomous health assistance and medication delivery system, a temperature sensor is vital for monitoring both patient health and medication storage conditions. Sensors like the DS18B20 measure body temperature.

For medication safety, it ensures drugs are stored within prescribed temperature ranges, especially for heat-sensitive medicines like insulin or vaccines. Integrated with the system's controller, the sensor enables real-time monitoring, data logging, and automated actions, enhancing reliability, patient safety, and compliance with medical storage standards.

5.5 Heart beat sensor

A heartbeat sensor in an autonomous health assistance and medication delivery system monitors the patient’s pulse rate in real time. Using optical or electrical methods, such as the pulse oximeter (e.g., MAX30100 or MAX30102), it detects blood flow changes to measure heartbeats per minute (BPM). This data helps assess the patient’s cardiovascular status, identify irregularities like tachycardia or bradycardia, and trigger alerts or medication delivery when abnormalities are detected. Integrated with a microcontroller, the sensor supports continuous health monitoring, enhancing emergency response and personalized care. It plays a crucial role in maintaining patient safety within smart healthcare environments.

5.6 Glucose

A glucose sensor in an autonomous health assistance and medication delivery system monitors blood sugar levels, crucial for managing diabetes and preventing complications. Non-invasive or minimally invasive sensors, like the CGM (Continuous Glucose Monitor) or GlucoScout, provide real-time glucose readings. Integrated with a microcontroller, the system can analyze trends, detect hypoglycemia or hyperglycemia, and automatically notify caregivers or trigger insulin delivery. This automation ensures timely intervention and reduces patient risk. By continuously tracking glucose levels and linking data to medication control, the system supports personalized treatment, improves health outcomes, and enhances the efficiency of remote or in-home diabetic care.

5.7 Power supply

The power supply is essential for operating an autonomous health assistance and medication delivery system, ensuring uninterrupted functionality of all components. It typically includes rechargeable lithium-ion batteries or regulated DC power sources to provide stable voltage to microcontrollers, motors, sensors, and communication modules. A battery management system (BMS) monitors charge levels, prevents overcharging, and extends battery life. In mobile systems, onboard batteries enable autonomous operation without dependency on fixed power sources. Backup power, such as supercapacitors or secondary batteries, ensures reliability during outages. A well-designed power supply guarantees continuous, safe, and efficient performance, critical for healthcare accuracy and patient safety.

5.8 LCD

An Interface Control Document (ICD) in an autonomous health assistance and medication delivery system defines the communication protocols, data formats, and electrical interfaces between all hardware and software components. It ensures seamless integration of modules like microcontrollers, sensors (heartbeat, temperature, glucose), motors, displays, and communication devices. The ICD specifies signal types, voltage levels, pin configurations, data flow directions, and timing requirements. By standardizing these interactions, the ICD prevents integration issues, supports modular design, and simplifies troubleshooting and system upgrades. It is crucial for development, testing, and maintenance, ensuring reliable and coordinated operation in complex healthcare automation environments.

CHAPTER-6

HARDWAREDESCRITION

The L298 is an integrated monolithic circuit in a 15-lead Multiwatt and in PowerSO20 packages. It is a high voltage, high current dual full-bridge driver designed to accept standard TTL logic levels and drive inductive loads such as relays, solenoids, DC and stepping motors. Two enable inputs are provided to enable or disable the device independently of the input signals. The emitters of the lower transistors of each bridge are connected together and the corresponding external terminal can be used for the connection of an external sensing resistor. An additional supply input is provided so that the logic works at a lower voltage.

6.1 All features

1. Operating supply voltage up to 46v
2. Low saturation voltage
3. Total dc current up to 4a
4. Logical \"0\" input voltage up to 1.5 v (high noise immunity)
5. Overtemperature protection

6.1.1 Features& Specifications

1. Driver Model: L298N 2A
2. Driver Chip: Double H Bridge L298N
3. Motor Supply Voltage (Maximum): 46V
4. Motor Supply Current (Maximum): 2A
5. Logic Voltage: 5V
6. Driver Voltage: 5-35V

6.1 MOTOR DRIVER MODULE

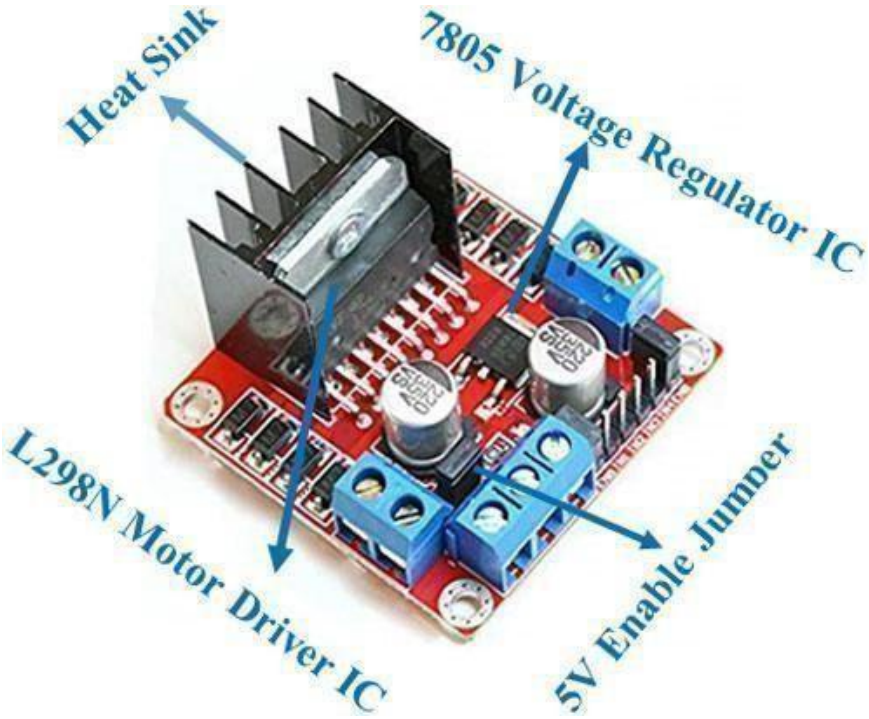

Fig 6.1 MOTOR DRIVER MODULE

An L298 Motor Driver IC is a monolithic chip, used in motor driver modules to control the speed of a DC motor. At present, the most frequently used motor driver ICs as compared to L298 is; L293D & L2938N. This IC is frequently used in RC cars & autonomous robots. The input provided to a motor driver module is taken from a controller like Arduino.

6.2 Pin Configuration:

The pin configurations of L298 dual full-bridge driver IC include 15-pins where each pin is discussed below. This IC includes dual bridges namely; H-bridge A & H-bridge B.

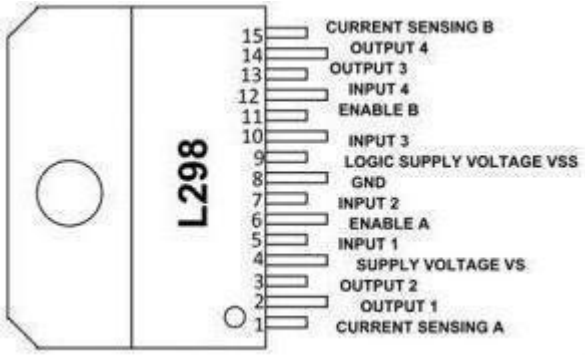

Fig 6.2 DRIVER CHIP

- Pin1 (Current Sensing A): This pin is used to control the flow of the current of the load.
- Pin2 & 3(Output 1 & 2): These two pins are output pins of the H-Bridge A where the current supplies throughout the load which is monitored at pin-1
- Pin4 (VS): This is a voltage supply pin, connected to +5V.
- Pin5 & 7 (Inputs): Control Inputs of the Bridge A & compatible with TTL
- Pin6 (Enable A): This is an enable input with TTL compatible
- Pin8 (GND): This is a GND pin
- Pin9 (Logic Voltage Supply): This pin provides voltage supply for the logic blocks.
- Pin10 & 12 (Inputs3 & 4): These are control inputs of bridge-B and compatible with T.
- 11 Tbin 13 and 14 are output pins and 15 current flow pin

6.2.1 Features & Specifications

The features and specifications of L298 IC include the following.

- The operating voltage supply is up to 46 v.
- Total DC is up to 4A.
- The saturation voltage is less.
- Protection from over temperature.
- Power dissipation is 25w.
- Operating voltage ranges from +5 to +46v
- The maximum voltage supply voltage is 50v.
- Maximum input & enable voltage is +7v.
- TTL controlled inputs.
- Storage temperature ranges from -40°c – 150°c.
- Operating temperature ranges from -23°c to – 130°c.
- The maximum allowed the current flow to draw through every output is 3a.

6.3 Motor

Electric motor, any of a class of devices that convert electrical energy to mechanical energy, usually by employing electromagnetic phenomena. Most electric motors develop their mechanical torque by the interaction of conductors carrying current in a direction at right angles to a magnetic field. The various types of electric motor differ in the ways in which the conductors and the field are arranged and also in the control that can be exercised over mechanical output torque, speed, and position.

An electric motor is an electric machine that converts electrical energy to mechanical energy. Most electric motors work via the interaction of the motor magnetic field and electrical current in a wound wire to produce force in the manner of torque supplied on the motor shaft. An electrical generator is identical mechanically to an electrical motor but functions with a reversed flow of energy, converting mechanical power to electrical power.

Electric motors may be driven by direct current (DC) supplies, like from rectifiers or batteries, or by alternating current (AC) supplies, like a power grid, electrical generators, or inverters. Electric motors can be categorized by concerns such as power supply type, application, construction, and type of movement output. They may be energized by DC or AC, be brushless or brushed, three-phase, two-phase, or single-phase, radial flux or axial, and can be liquid-cooled or air-cooled.Standardized motors offer appropriate mechanical energy for industrial use.

An electric motor is an electric machine that converts electrical energy to mechanical energy. Most electric motors work via the interaction of the motor magnetic field and electrical current in a wound wire to produce force in the manner of torque supplied on the motor shaft. An electrical generator is identical mechanically to an electrical motor but functions with a reversed flow of energy, converting mechanical power to electrical power.

Electric motors may be driven by direct current (DC) supplies, like from rectifiers or batteries, or by alternating current (AC) supplies, like a power grid, electrical generators, or inverters. Electric motors can be categorized by concerns such as power supply type, application, construction, and type of movement output. They may be energized by DC or AC, be brushless or brushed, three-phase, two-phase, or single-phase, radial flux or axial, and can be liquid-cooled or air-cooled.

Standardized motors offer appropriate mechanical energy for industrial use. Applications include blowers and pumps, industrial fans, machine tools, power tools, household appliances, disk drives, and vehicles. Small motors can be found in electrical watches. In certain uses, like in regenerative braking in traction motors, electric motors may be utilized in reverse as generators that recover power that may otherwise be lost as friction and heat.

6.3.1 Construction of an Electric Motor

Two mechanical components of electric motors are the stator, which is fixed and the rotor, which moves. It also has two electrical components, magnets set and an armature, one of them is attached to the stator and the other to the rotor, together making a magnetic circuit.Field magnets produce a magnetic field that passes through the winding.

6.3.2 Electric Motor Bearings

Bearings support the rotor and allow the rotor to spin on its axis. The motor housing in turn supports the bearings.

6.3.3 Electric Motor Rotor

The rotor is the mobile part that supplies the mechanical power. The rotor generally holds conductors which carry current and the stator magnetic field applies a force on to spin the shaft. Alternatively, other rotors have permanent magnets, and conductors are held by the stator. Permanent magnets give high efficiency over a bigger power range and working speed.

The air gap between the rotor and stator allows it to spin. The breadth of the gap has an important effect on the motor electrical properties. It is commonly made to be as small as possible, since a large gap produces weak performance. It is the primary source for the low power factor with which motors function. The energizing current rises and power factor reduces with the air gap, hence narrow gaps are better. Conversely, gaps which are very small may cause mechanical problems on top of losses and noise.

The motor shaft protrudes through bearings to the motor's outer side, where the load is placed. Because the force of the load is applied beyond the furthest outer bearing, load is overhung.

6.3.4 Electric Motor Stator

The stator surrounds the rotor, and generally holds the field magnets, these are either electromagnets consisting of wound wire on a ferromagnetic core of iron or permanent magnets. These produce a magnetic field that passes through the rotor winding, applying force on the winding. The stator iron core is made of many thin metallic sheets which have insulation from each other, known as laminations.

Lamination is utilized to lower energy loss which results if a solid core is utilized. Resin-packed motors, utilized in air conditioners and washing machines, utilize the damping attributes of plastic to lower vibration and noise.

Fig 6.3 ELECTIC MOTOR STATOR

6.3.5 Electric Motor Armature

The armature comprises wound wire on a ferromagnetic core. Current flowing through wire makes the magnetic field exert a Lorentz force onto it, rotating the rotor, which supplies the mechanical output

6.3.6 Controller

The microcontroller serves as the central processing unit (CPU) of the system.Responsible for data acquisition, processing, and decision-making. Orchestrates the functions of sensors, managing the overall operation of the health monitoring system.

6.4 POWER SUPPLY

The power supply is responsible for providing the necessary electrical energy to all components of the system.It can be sourced from batteries, AC adapters, or a combination, depending on the device's design and portability requirements.Ensures a continuous and stable flow of power to keep the system operational.

6.5 TEMPERATURE SENSOR

In an Automated Health Care Assistant and Medication Delivery System (AHAMDS), a temperature sensor plays a vital role in monitoring the patient's body temperature in real-time. It ensures continuous health tracking, early fever detection, and timely medication alerts.The system typically uses a digital temperature sensor like LM35, DS18B20, or MLX90614 (non-contact). These sensors are integrated with a microcontroller (e.g., Arduino or Raspberry Pi) and placed on or near the patient to measure temperature accurately.When the temperature exceeds or falls below a predefined threshold (e.g., 37.5°C for fever), the system performs multiple actions:

1. Alerts the user or caretaker via a buzzer or message.
2. Displays temperature on an LCD or app.
3. Triggers medication delivery if required, such as dispensing a fever- reducing tablet.

The temperature sensor is lightweight, power-efficient, and provides instant data. It can also be connected to a cloud platform for remote health monitoring, where doctors or family members can check the patient's temperature from anywhere.This automation ensures that temperature-related health issues are detected early, which is crucial in elderly or chronic patients.

6.6 HEARTBEAT SENSOR

In an Autonomous Health Assistant and Medication Delivery System (AHAMDS), the heart beat sensor plays a crucial role in continuously monitoring the patient's heart rate. It helps in early detection of abnormal heart activity and enables automated medical responses, ensuring better patient care.

The system commonly uses sensors like the Pulse Sensor, MAX30100, or MAX30102, which are small, non-invasive, and easy to interface with microcontrollers like Arduino or Raspberry Pi. These sensors work on the principle of photoplethysmography (PPG), where a light source and photodetector measure blood volume changes in the fingertip or earlobe.The heartbeat sensor detects pulses per minute (BPM) and sends the data to the microcontroller. The software then compares the BPM value with predefined.thresholds (typically 60–100 BPM for adults). If the reading is too high (tachycardia) or too low (bradycardia), the system:

1. Sends an alert to the user or caretaker.

2. Displays BPM on an LCD screen or app.

3. Activates the medication delivery unit

4. Stores the data in cloud storage for doctor analysis.

For patients with heart conditions, this continuous monitoring helps prevent serious complications by ensuring timely medical intervention.

6.7 GLUCOSE

In an Autonomous Health Assistant and Medication Delivery System (AHAMDS), a glucose sensor plays a critical role in monitoring a patient's blood sugar levels. This is especially important for patients with diabetes, where maintaining normal glucose levels is vital for health and safety.The system commonly uses sensors like the CGM (Continuous Glucose Monitoring) devices, or non-invasive optical glucose sensors. These sensors either use a small needle-like probe placed under the skin or use light-based technology to measure glucose levels in the blood or interstitial fluid.

The glucose sensor continuously tracks the patient's blood glucose levels and sends the data to a microcontroller (like Arduino or Raspberry Pi) in real time. The software then compares the glucose value with predefined safe limits (usually 70–140 mg/dL for normal levels).If the sensor detects high (hyperglycemia) or low (hypoglycemia) sugar levels, the system performs the following actions:

1. Triggers an alert through sound, light, or a mobile notification.
2. Displays the glucose reading on an LCD screen or smartphone app.
3. Automatically delivers the required medication or insulin using a connected mechanism.
4. Stores data in the cloud for doctors or caretakers to review.

This helps in preventing diabetic emergencies such as diabetic coma or seizures caused by sudden sugar level fluctuations. Remote monitoring also allows healthcare providers to adjust treatment plans without needing frequent clinic visits.

6.8 LCD

Looking at the board from the top down, this is an outline of what you will see (parts of the board you might interact with in the course of normal use are highlighted)

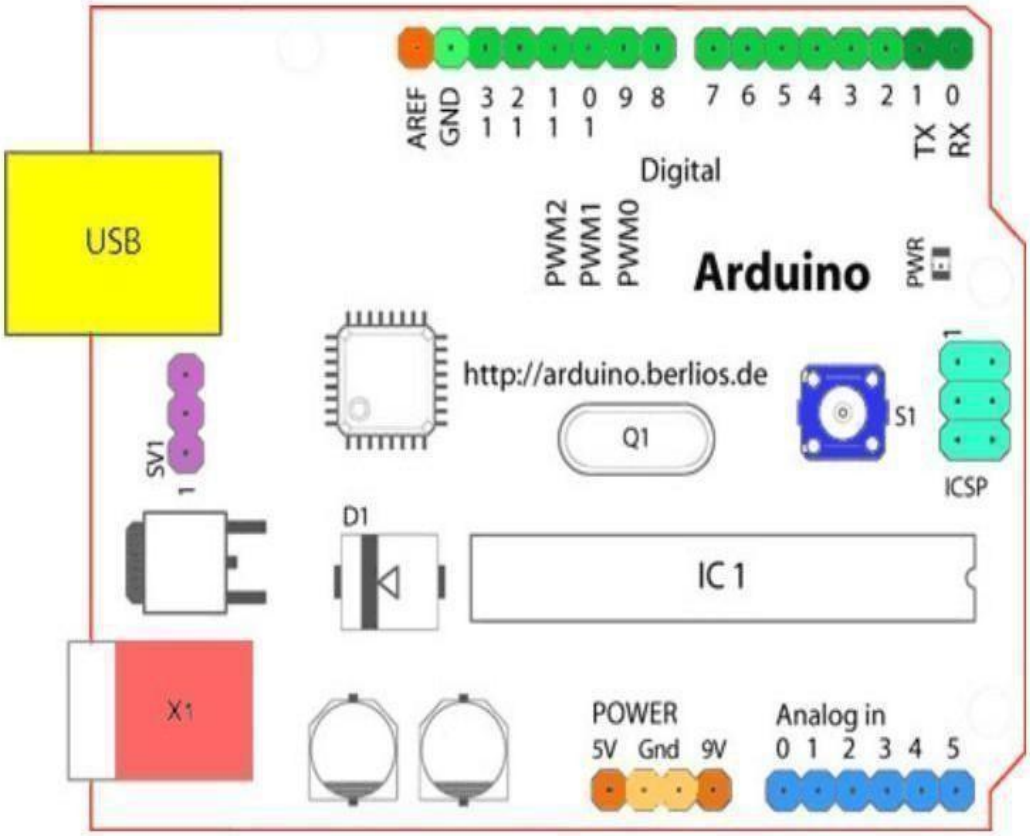

The Arduino UNO.

Fig 6.4 ARDUINO UNO

- Analog Reference pin (orange)
- Digital Ground (light green)
- Digital Pins 2-13 (green)
- Digital Pins 0-1/Serial In/Out - TX/RX (dark green) - These pins cannot be used for digital i/o (digitalRead and digitalWrite) if you are also using serial communication (e.g. Serial.begin).
- Reset Button - S1 (dark blue)
- In-circuit Serial Programmer (blue-green)
- Analog In Pins 0-5 (light blue)
- Power and Ground Pins (power: orange, grounds: light orange)
- External Power Supply In (9-12VDC) - X1 (pink)
- Toggles External Power and USB Power (place jumper on two pins closest to desired supply) - SV1 (purple)
- USB (used for uploading sketches to the board and for serial communication between the board and the computer; can be used to power the board) (yellow)
- Microcontrollers
- ATmega328P (used on most recent boards)
- Digital I/O Pins: 14 (of which 6 provide PWM output)
- Analog Input Pins: 6 (DIP) or 8 (SMD)
- DC Current per I/O Pin: 40 mA
- Flash Memory: 32 KB

- Analog In Pins 0-5 (light blue)
- Power and Ground Pins (power: orange, grounds: light orange)
- External Power Supply In (9-12VDC) - X1 (pink)
- Toggles External Power and USB Power (place jumper on two pins closest to desired supply) - SV1 (purple)
- USB (used for uploading sketches to the board and for serial communication between the board and the computer; can be used to power the board) (yellow)
- Microcontrollers
- ATmega328P (used on most recent boards)
- Digital I/O Pins: 14 (of which 6 provide PWM output)
- Analog Input Pins: 6 (DIP) or 8 (SMD)
- DC Current per I/O Pin: 40 mA
- Flash Memory: 32 KB

- EEPROM: 1 KB
- EEPROM: 512 bytes
- Digital I/O Pins: 14 (of which 6 provide PWM output)
- Analog Input Pins: 6 (DIP) or 8 (SMD)
- DC Current per I/O Pin: 40 mA
- Flash Memory 16 KB:
- SRAM: 1 KB
- ATmega8 (usedon some older board)
- Digital I/O Pins: 14 (of which 3 provide PWM output)
- Analog Input Pins: 6
- DC Current per I/O Pin: 40 mA
- Flash Memory: 8 KB
- SRAM: 1 KB
- EEPROM: 512 bytes

6.8.1 Digital Pins

The specific functions listed below, the digital pins on an Arduino board can be used for general purpose input and output via the pinMode(), digitalRead(), and digitalWrite() commands. Each pin has an internal pull-up resistor which can be turned on and off using digitalWrite() (w/ a value of HIGH or LOW, respectively) when the pin is configured as an input. The maximum current per pin is 40 m.

Serial: 0 (RX) and 1 (TX). Used to receive (RX) and transmit (TX) TTL serial data. On the Arduino Diecimila, these pins are connected to the corresponding pins of the FTDI USB-to-TTL Serial chip. On the Arduino BT, they are connected to the corresponding pins of the WT11 Bluetooth® module. On the Arduino Mini and LilyPad Arduino, they are intended for use with an external TTL serial module (e.g. the Mini-USB Adapter).External Interrupts: 2 and 3. These pins can be configured to trigger an interrupt on a low value, a rising or falling edge, or a change in value. See the attachInterrupt() function for details.PWM: 3, 5, 6, 9, 10, and 11. Provide 8-bit PWM output with the analogWrite() function. On boards with an ATmega8, PWM output is available only on pins 9, 10, and 11.

BT Reset: 7. (Arduino BT-only) Connected to the reset line of the Bluetooth® module.LED: 13. On the Diecimila and LilyPad, there is a built-in LED connected to digital pin 13. When the pin is HIGH value, the LED is on, when the pin is LOW, it's off.

6.8.2 Analog Pins

The specific functions listed below, the analog input pins support 10-bit analog-to-digital conversion (ADC) using the analogRead() function. Most of the analog inputs can also be used as digital pins: analoginput 0 as digital pin 14 through analog input 5 as digital pin 19. Analog inputs 6 and 7 (present on the Mini and BT) cannot be used as digital pins.I2C: 4 (SDA) and 5 (SCL). Support I2C (TWI) communication using the Wire library (documentation on the Wiring website).

6.8.3 Power Pins

VIN (sometimes labelled "9V"). The input voltage to the Arduino board when it's using an external power source (as opposed to 5 volts from the USB connection or other regulated power source). You can supply voltage through this pin, or, if supplying voltage via the power jack, access it through this pin. Note that different boards accept different input voltages ranges, please see the documentation for your board. Also note that the LilyPad has no VIN pin and accepts only a regulated input.5V. The regulated power supply used to power the microcontroller and other components on the board. This can come either from VIN via an on- board regulator, or be supplied by USB or another regulated 5V supply.

3V3. (Diecimila-only) A 3.3 volt supply generated by the on-board FTDI chip. GND. Ground pins.Other PinS: AREF. Reference voltage for the analog inputs. Used with analogReference().

Reset. (Diecimila-only) Bring this line LOW to reset the microcontroller. Typically used to add a reset button to shields which block the one on the board.

6.9 POWER SUPPLY

A power supply is an electrical device that supplies electric power to an electrical load. The main purpose of a power supply is to convert electric current from a source to the correct voltage, current, and frequency to power the load. As a result, power supplies are sometimes referred to as electric power converters. Some power supplies are separate standalone pieces of equipment, while others are built into the load appliances that they power. Examples of the latter include power supplies found in desktop computers and consumer electronics devices. Other functions that power supplies may perform include limiting the current drawn by the load to safe levels, shutting off the current in the event of an electrical fault, power conditioning to prevent electronic noise or voltage surges on the input from reaching the load, power- factor correction, and storing energy so it can continue to power the load in the event of a temporary interruption in the source power (uninterruptible power supply).

All power supplies have a power input connection, which receives energy in the form of electric current from a source, and one or more power output or rail connections that deliver current to the load. The source power may come from the electric power grid, such as an electrical outlet, energy storage devices such as batteries or fuel cells, generators or alternators, solar power converters, or another power supply. The input and output are usually hardwired circuit connections, though some power supplies employ wireless energy transfer to power their loads without wired connections. Some power supplies have other types of inputs and outputs as well, for functions such as external monitoring and control.

Power supplies are categorized in various ways, including by functional features. For example, a regulated power supply is one that maintains constant output voltage or current despite variations in load current or input voltage. Conversely, the output of an unregulated power supply can change significantly when its input voltage or load current changes. Adjustable power supplies allow the output voltage or current to be programmed by mechanical controls (e.g., knobs on the power supply front panel), or by means of a control input, or both. An adjustable regulated power supply is one that is both adjustable and regulated. An isolated power supply has a power output that is electrically independent of its power input; this is in contrast to other power supplies that share a common connection between power input and output.

Power supplies can be broadly divided into linear and switching types. Linear power converters process the input power directly, with all active power conversion components operating in their linear operating regions. In switching power converters, the input power is converted to AC or to DC pulses before processing, by components that operate predominantly in non- linear modes (e.g., transistors that spend most of their time in cutoff or saturation). Power is "lost" (converted to heat) when components operate in their linear regions and, consequently, switching converters are usually more efficient than linear converters because their components spend less time in linear operating regions.

6.10 LINEAR REGULATOR

The function of a linear voltage regulator is to convert a varying DC voltage to a constant, often specific, lower DC voltage.A constant output voltage is required in many power supply applications, but the voltage provided by many energy sources will vary with changes in load impedance. Furthermore, when an unregulated DC power supply is the energy source, its output voltage will also vary with changing input voltage. To circumvent this, some power supplies use a linear voltage regulator to maintain the output voltage at a steady value, independent of fluctuations in input voltage and load impedance. Linear regulators can also reduce the magnitude of ripple and noise on the output voltage.

6.11 ACADAPTOR

An AC adapter is a power supply built into an AC mains power plug. AC adapters are also known by various other names such as "plug pack" or "plug-in adapter", or by slang terms such as "wall wart". AC adapters typically have a single AC or DC output that is conveyed over a hardwired cable to a connector, but some adapters have multiple outputs that may be conveyed over one or more cables. "Universal" AC adapters have interchangeable input connectors to accommodate different AC mains voltages.

Adapters with AC outputs may consist only of a passive transformer; in case of DC-output, adapters consist of either transformer with few diodes and capacitors or they may employ switch-mode power supply circuitry. AC adapters consume power (and produce electric and magnetic fields) even when not connected to a load; for this reason they are sometimes known as "electricity vampires", and may be plugged into power strips.

CHAPTER -7

HARDWAREOUTPUT

In the Autonomous Health Assistant and Medication Delivery System (AHAMDS), hardware output refers to the physical actions and responses generated by the system based on real-time sensor data. These outputs are essential for alerting users, displaying vital signs, and dispensing medicine automatically, making the system intelligent and user-friendly.

The system uses various sensors to monitor parameters like body temperature, heart rate, and glucose level. These values are processed by a microcontroller (such as Arduino or Raspberry Pi), which then triggers different hardware outputs based on the readings.

Key Hardware Output Components:

1. LCD Display:

The LCD or OLED screen displays real-time health data like temperature, heart rate (BPM), and glucose levels. It allows patients or caretakers to monitor health status easily.

2. Buzzer:

When abnormal values are detected (e.g., high fever or abnormal heartbeat), the buzzer sounds an alarm to alert the patient or caretaker about the emergency.

3. LED Indicators:

LEDs provide a quick visual indication of the patient's condition—green for normal, red for danger—helpful for immediate attention.

4. Medication Delivery Unit:

This is a motor-based dispenser that releases the correct dosage of medicine automatically when required. It works using servo or stepper motors controlled by the microcontroller.

5. Communication Module (Wi-Fi/Bluetooth):

These modules send data to a mobile app or cloud server, allowing doctors and caretakers to monitor patient status remotely.

CHAPTER-8

RESULT

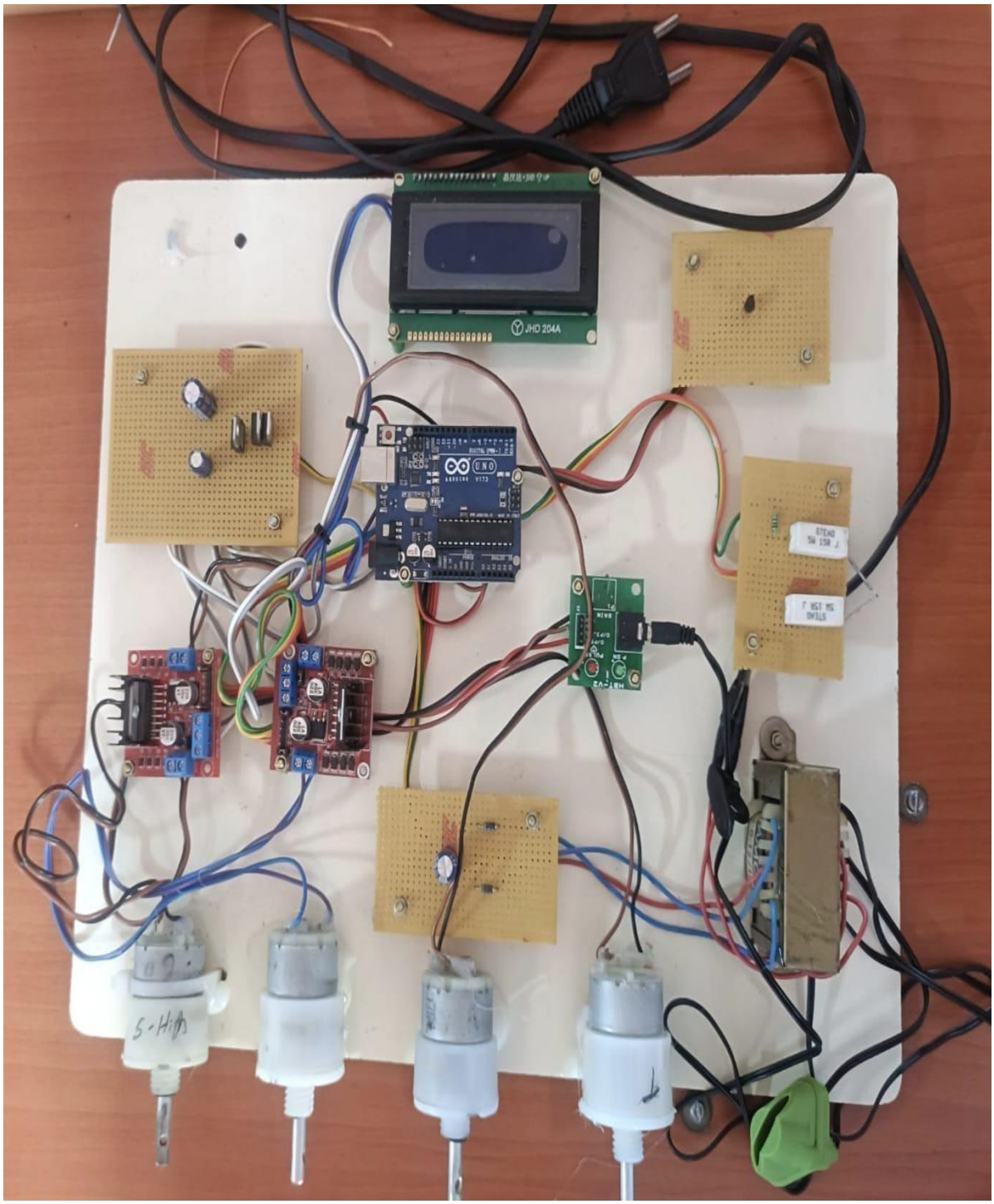

CHAPTER-9

CONCLUSION

In conclusion, the development and implementation of autonomous in health assistance and medication delivery systems signify a groundbreaking advancement in the field of healthcare. These systems represent a fusion of cutting-edge technologies such as robotics, artificial intelligence, and Internet of Things, culminating in a comprehensive solution to enhance patient care, medication management, and healthcare accessibility. By leveraging real-time monitoring, personalized care algorithms, and smart medication delivery, these systems empower patients to take control of their health while providing healthcare professionals with invaluable tools to optimize treatment outcomes.

The adaptability and scalability of autonomous health assistance systems ensure their relevance and effectiveness in addressing evolving healthcare needs and technological advancements. Whether it's integrating advanced diagnostics, expanding telemedicine capabilities, or complying with regulatory standards, these systems are designed to evolve alongside the changing healthcare landscape, ensuring long-term sustainability and efficacy. The prioritization of data security and privacy safeguards patient confidentiality and instills trust and confidence in the adoption of these technologies.Another crucial aspect is the potential of autonomous health assistance systems to bridge healthcare disparities and improve access to quality care, especially in underserved or remote communities.

Through initiatives such as delivering medications to rural areas, providing teleconsultations to homebound patients, or remotely monitoring chronic conditions, these systems promote health equity and democratize healthcare delivery.

The seamless integration and interoperability of autonomous health assistance systems facilitate collaboration and communication among healthcare stakeholders. By connecting patients, caregivers, and healthcare providers through electronic health records, telehealth platforms, and wearable devices, these systems enable real-time data exchange, remote consultations, and collaborative decision-making. This interoperability fosters continuity of care, enhances patient engagement, and streamlines care delivery processes.

The optimization of medication management through autonomous health assistance systems reduces the risk of medication errors and improves adherence to treatment regimens. By automating medication dispensing and incorporating personalized care plans, these systems ensure that patients receive the right medications at the right time and dosage. This not only enhances patient safety but also minimizes healthcare costs associated with adverse drug events and hospitalizations.

Autonomous health assistance systems empower patients to actively participate in their healthcare journey by providing them with access to real-time health data and personalized health insights.

In conclusion, autonomous health assistance and medication delivery systems represent a transformative approach to healthcare delivery, offering a holistic solution to address the challenges of modern healthcare. Through innovation, collaboration, and a patient-centered approach, these systems have the potential to revolutionize healthcare delivery, improve patient outcomes, and enhance the overall quality and accessibility of healthcare services. As these technologies continue to evolve and mature, they hold the promise of shaping the future of healthcare and ushering in a new era of personalized, efficient, and patient- centric care.

CHAPTER-10

FUTURESCOPE

The future scope of autonomous health assistance and medication delivery systems is boundless, with ongoing advancements poised to redefine the landscape of healthcare delivery and patient management. One significant area of development lies in the integration of artificial intelligence (AI) and machine learning algorithms into these systems. By leveraging AI-driven predictive analytics, these systems can anticipate patients' healthcare needs, identify patterns in their health data, and proactively intervene to prevent health complications. This predictive capability will enable more personalized and preemptive healthcare interventions, ultimately leading to improved health outcomes and reduced healthcare costs.

The integration of advanced robotics technology holds immense potential for enhancing the capabilities of autonomous health assistance systems. Future iterations may incorporate robotic companions or assistants capable of performing tasks such as physical therapy exercises, assisting with activities of daily living, or even conducting basic medical procedures under remote supervision. These robotic assistants will not only provide practical support to patients but also alleviate the burden on healthcare professionals, allowing them to focus on more complex and specialized aspects of patient care.

Another exciting frontier in the future of autonomous health assistance systems is the development of wearable.

Monitor vital signs, biomarkers, and other health metrics with unprecedented accuracy and granularity. By providing real-time insights into patients' health status, these wearable and implantable technologies will enable early detection of health issues, facilitate timely interventions, and empower individuals to actively manage their health proactively.

Advancements in telehealth and telemedicine technologies will further augment the capabilities of autonomous health assistance systems, enabling remote consultations, virtual monitoring, and telepresence-driven interventions. Patients will have access to a comprehensive suite of healthcare services from the comfort of their homes, reducing the need for in-person visits and enhancing convenience, particularly for individuals with limited mobility or living in remote areas. Telehealth-enabled autonomous systems will also foster greater collaboration among healthcare providers, enabling multidisciplinary care coordination and knowledge sharing to optimize patient outcomes.

The future of autonomous health assistance and medication delivery systems will see a greater emphasis on interoperability and data exchange standards. Efforts to harmonize data formats, protocols, and interfaces will enable seamless integration of these systems with existing healthcare infrastructure, EHR systems, and third-party applications. This interoperability will facilitate smooth information flow across healthcare settings, ensuring continuity of care, reducing duplication of efforts, and enhancing care coordination among providers.

Advancements in nanotechnology and drug delivery systems hold promise for revolutionizing medication administration and therapeutic

interventions. Future developments may include the use of nanoscale drug carriers for targeted delivery of medications to specific organs or tissues, reducing side effects and improving treatment efficacy. Additionally, implantable microdevices equipped with sensors and actuators could enable on- demand drug release based on real-time physiological data, ushering in a new era of personalized and precise medicine.

Another exciting avenue for future exploration is the incorporation of virtual reality (VR) and augmented reality (AR) technologies into autonomous health assistance systems. VR and AR applications can be used to create immersive healthcare experiences, such as virtual medical consultations, interactive rehabilitation exercises, or educational simulations for patients and healthcare professionals. By harnessing the power of immersive technologies, these systems will enhance patient engagement, improve treatment adherence, and facilitate more effective healthcare delivery.

The future of autonomous health assistance systems will witness advancements in remote surgical and procedural interventions enabled by robotic-assisted surgery and teleoperation technologies. Surgeons will be able to perform complex procedures with greater precision and dexterity, leveraging robotic assistance and real-time feedback systems. Teleoperation capabilities will allow surgeons to conduct procedures remotely, expanding access to specialized surgical expertise and reducing the need for patient travel.

The integration of blockchain technology holds promise for enhancing the security, privacy, and integrity of health data within autonomous health assistance systems.

.

In conclusion, the future of autonomous health assistance and medication delivery systems is characterized by continuous innovation and technological advancement, driven by the quest to improve patient care, enhance healthcare access, and optimize health outcomes. By embracing emerging technologies such as AI, robotics, wearable devices, telehealth, nanotechnology, VR/AR, teleoperation, and blockchain, these systems will redefine the boundaries of healthcare delivery, ushering in an era of personalized, proactive, and precision medicine. As these technologies mature and converge, they hold the promise of transforming healthcare delivery models, empowering patients, and revolutionizing the practice of medicine for generations to come.

CHAPTER-11

REFERENCE

1. Khalid, M.; Awais, M.; Singh, N.; Khan, S.; Raza, M.; Malik, Q.B.; Imran, M. Autonomous Transportation in Emergency Healthcare Services: Framework, Challenges, and Future Work. IEEE Internet Things Mag. 2021, 4, 28–33.
2. Bloss, R. Unmanned vehicles while becoming smaller and smarter are addressing new applications in medical, agriculture, in addition to military and security. Ind. Robot. Int. J. 2014, 41, 82– 86.
3. Prasad, G.; Abishek, P.; Karthick, R. Influence of unmanned aerial vehicle in medical product transport. Int. J. Intell. Unmanned Syst. 2019, 7, 88–94.
4. Søraa, R.A.; Fostervold, M.E. Social domestication of service robots: The secret lives of Automated Guided Vehicles (AGVs) at a Norwegian hospital. Int. J. Hum. Comput. Stud. 2021, 152, 102627.
5. Bacik, J.; Durovsky, F.; Biros, M.; Kyslan, K.; Perdukova, D.; Padmanaban, S. Pathfinder-Development of Automated Guided Vehicle for Hospital Logistics. IEEE Access 2017, 5, 26892–26900.
6. Geronel, R.S.; Begnini, G.R.; Botez, R.M.; Bueno, D.D. An overview on the use of unmanned aerial vehicles for medical product transportation: Flight dynamics and vibration issues. J. Braz. Soc. Mech. Sci. Eng. 2022, 44, 349.
7. Macias, J.E.; Angeloudis, P.; Ochieng, W. Optimal hub selection for rapid medical deliveries using unmanned aerial vehicles. Transp. Res. Part C Emerg. Technol. 2020, 110, 56–80.
8. Amicone, D.; Cannas, A.; Marci, A.; Tortora, G. A smart capsule equipped with artificial intelligence for autonomous delivery of medical material through drones. Appl. Sci. 2021, 11, 7976.
9. Liu, X.; Yuan, Q.; Wang, G.; Bian, Y.; Xu, F.; Chen, Y. Drones delivering automated external defibrillators: A new strategy to improve the prognosis of out-of-hospital cardiac arrest. Resuscitation 2023, 182, 109669.
10. Hogan, W.; Harris, M.; Brock, A.; Rodwell, J. What Is Holding Back The Use of Drones for Medication Delivery in Rural Australia? Sustainability 2022, 14, 15778.

11. Nenni, M.E.; Pasquale, V.D.; Miranda, S.; Riemma, S. Development of a Drone-Supported Emergency Medical Service. Int. J. Technol. 2020, 11, 656–666.
12. Achával, M.I.F.; Mammi, L.F.; FortiniCabarcos, N.; Guiñazú, G.G.; Robledo, C.A.M.; Dvorkin, J.; Monteverde, E.; Pascual, C.; Costa, C.E.; Vainstein, E.O. Assessment of emergency trolley drugs in a children's hospital. Before and after study on an educational intervention. Arch. Argent. Pediatr. 2020, 118, 234–239.
13. Ren, P. Local Path Planning Method for Unmanned Vehicle Based on Model Predictive Control in Hospital Environment. J. Test. Eval. 2023, 51, 20210441.
14. Park, Y.; Lee, S.; Sung, I.; Nielsen, P.; Moon, I. Facility Location-Allocation Problem for Emergency Medical Service with Unmanned Aerial Vehicle. IEEE Trans. Intell. Transp. Syst. 2023, 24, 1465–1479.
15. Tow, C.Y.; Kuen, K.W. Force Evaluation and Comparison for Supply Trolley in a Hospital. Procedia Manuf. 2015, 3, 1861–1864.
16. Ajzenberg, H.; Newman, P.; Harris, G.A.; Cranston, M.; Boyd, J.G. A "Neurological Emergency Trolley" reduces turnaround time for high-risk medications in a general intensive care unit. Intensive Crit. Care Nurs. 2018, 44, 40–44.
17. Tsima, B.M.; Rajeswaran, L.; Cox, M. Assessment of cardiopulmonary resuscitation equipment in resuscitation trolleys in district hospitals in Botswana: A cross-sectional study. Afr. J. Prim. Health Care Fam. Med. 2019, 11, a2029.
18. Yin, S.; Jun, J.; Siew, H.; Bee, S.; Ng, I.; Putra, A.S.; Ang, A. Functional redesign of the Hospital trolley-Bed tray table. Ergon. Des. 2016, 24, 20– 26.
19. Saltzherr, T.P.; Luitse, J.S.; Hoogerwerf, N.; Vernooij, A.S.; Goslings, J.C. Facilitating in-hospital transport of trauma patients: Design of a trauma life support trolley. Injury 2008, 39, 809–812.
20. He, X.; Quan, H.; Lin, W.; Deng, W.; Tan, Z. AGV Scheduling Optimization for Medical Waste Sorting System. Sci. Program. 2021, 2021.
21. Chen, W.A.; Koster, R.B.D.; Gong, Y. Performance evaluation of automated medicine delivery systems. Transp. Res. Part E Logist.

22. Saad, N.M.; Abdullah, A.R.; Noor, N.S.; Hamid, N.A.; Syahmi, M.A.M.; Ali, N.M. Automated medical surgical trolley. Int. J. Electr. Comput. Eng. 2019, 9, 1822–1831.
23. Tuğrul, K.M. Drone Technologies and Applications; IntechOpen: London, UK, 2023.
24. European Commission. A Drone Strategy 2.0 for a Smart and Sustainable Unmanned Aircraft Eco-System in Europe; European Commission: Brussels, Belgium, 2022.
25. Claesson, A.; Svensson, L.; Nordberg, P.; Ringh, M.; Rosenqvist, M.; Djarv, T.; Samuelsson, J.; Hernborg, O.; Dahlbom, P.; Jansson, A.; et al. Drones may be used to save lives in out of hospital cardiac arrest due to drowning. Resuscitation 2017, 114, 152–156.
26. Purahong, B.; Anuwongpinit, T.; Juhong, A.; Kanjanasurat, I.; Pintaviooj, C. Medical Drone Managing System for Automated External Defibrillator Delivery Service. Drones 2022, 6, 93.
27. Sham, R.; Siau, C.S.; Tan, S.; Kiu, D.C.; Sabhi, H.; Thew, H.Z.; Selvachandran, G.; Quek, S.G.; Ahmad, N.; Ramli, M.H.M. Drone Usage for Medicine and Vaccine Delivery during the COVID-19 Pandemic: Attitude of Health Care Workers in Rural Medical Centres. Drones 2022, 6, 109.
28. Baloola, M.O.; Ibrahim, F.; Mohktar, M.S. Optimization of Medication Delivery Drone with IoT-Guidance Landing System Based on Direction and Intensity of Light. Sensors 2022, 22, 4272.
29. Damoah, I.S.; Ayakwah, A.; Tingbani, I. Artificial intelligence (AI)- enhanced medical drones in the healthcare supply chain (HSC) for sustainability development: A case study. J. Clean. Prod. 2021, 328, 129598.

ICETS 2025

Scientific.Net ICTACADEMY INSTITUTION'S INNOVATION COUNCIL IQAC

MUTHAYAMMAL COLLEGE OF ENGINEERING

(Approved by AICTE, New Delhi & Affiliated to Anna University)

Rasipuram - 637 408, Namakkal Dist., Tamil Nadu.

CERTIFICATE OF PARTICIPATION

This is to certify that

SUBAVIGNESH.E

AVS ENGINEERING COLLEGE,SALEM

has presented a paper titled

AUTONOMOUS HEALTH ASSISTANCE AND MEDICATION

in

9th International Conference on Engineering Technology and Science (ICETS' 25)

organized by Muthayammal College of Engineering, Rasipuram,

Namakkal Dt., Tamil Nadu on 28th March 2025.

Paper ID
AVS19

Chairperson

Dr. C. NAGARAJAN
Convener

Dr. P. VENUGOPAL
Principal

Proceedings ISBN
978-93-342-3290-5

ICETS 2025

Scientific.Net

ICTACADEMY

INSTITUTION'S INNOVATION COUNCIL

IQAC

MUTHAYAMMAL COLLEGE OF ENGINEERING

(Approved by AICTE, New Delhi & Affiliated to Anna University)

Rasipuram - 637 408, Namakkal Dist., Tamil Nadu.

CERTIFICATE OF PARTICIPATION

This is to certify that

MOHAN.D

AVS ENGINEERING COLLEGE,SALEM

has presented a paper titled

AUTONOMOUS HEALTH ASSISTANCE AND MEDICATION

in

9th International Conference on Engineering Technology and Science (ICETS' 25)

organized by Muthayammal College of Engineering, Rasipuram,

Namakkal Dt., Tamil Nadu on 28th March 2025.

Paper ID

AVS19

Chairperson

Dr. C. NAGARAJAN
Convener

Dr. P. VENUGOPAL
Principal

Proceedings ISBN
978-93-342-3290-5

ICETS 2025

Scientific.Net

ICTACADEMY

INSTITUTION'S INNOVATION COUNCIL

IQAC

MUTHAYAMMAL COLLEGE OF ENGINEERING

(Approved by AICTE, New Delhi & Affiliated to Anna University)

Rasipuram - 637 408, Namakkal Dist., Tamil Nadu.

CERTIFICATE OF PARTICIPATION

This is to certify that

NIRMAL RAJ.L

AVS ENGINEERING COLLEGE,SALEM

has presented a paper titled

AUTONOMOUS HEALTH ASSISTANCE AND MEDICATION

in

9th International Conference on Engineering Technology and Science (ICETS' 25)

organized by Muthayammal College of Engineering, Rasipuram,

Namakkal Dt., Tamil Nadu on 28th March 2025.

ICETS'25

Paper ID

AVS19

Chairperson

Dr. C. NAGARAJAN
Convener

Dr. P. VENUGOPAL
Principal

Proceedings ISBN

978-93-342-3290-5

ICETS 2025

Scientific.Net

ICTACADEMY

INSTITUTION'S INNOVATION COUNCIL

IQAC

MUTHAYAMMAL COLLEGE OF ENGINEERING

(Approved by AICTE, New Delhi & Affiliated to Anna University)

Rasipuram - 637 408, Namakkal Dist., Tamil Nadu.

CERTIFICATE OF PARTICIPATION

This is to certify that

SANJAY RAJ.R

AVS ENGINEERING COLLEGE,SALEM

has presented a paper titled

AUTONOMOUS HEALTH ASSISTANCE AND MEDICATION

in

9th International Conference on Engineering Technology and Science (ICETS' 25)

organized by Muthayammal College of Engineering, Rasipuram,

Namakkal Dt., Tamil Nadu on 28th March 2025.

ICETS'25

Paper ID

AVS19

Chairperson

Dr. C. NAGARAJAN
Convener

Dr. P. VENUGOPAL
Principal

Proceedings ISBN

978-93-342-3290-5